Work Order ID 65982

Monday, January 31, 2011 3:51:54 PM

Item ID: D212-664-101 **Accept** **Setup Start** **Stop**

Revision ID:

Item Name: Crosstube Fwd

Start Date: 2/1/2011 **Start Qty:** 1.00 **Cust Item ID:**

Required Date: 2/18/2011 **Req'd Qty:** 1.00 **Customer:**

Reference:

Approvals: **Process Plan:** M **Date:** 11-03-1 **Tooling:** _____ **Date:** _____ **Run Start** **Stop**

QC: _____ **Date:** _____ **SPC (Y/N):** _____ **Date:** _____

Sequence ID/ Work Center ID	Operation Description	Set Up/ Run Hours	Tool ID	Tool #	Plan Code	Accept Qty	Reject Qty	Reject Number	Insp. Stamp
Draw Nbr	**Revision Nbr**								
D212-664-141	Rev D								
100	DOCUMENT CONTROL	0.00							
DC	**Memo**	0.00							
Document Control	Photocopy bluefile and create labels as per PPP D212-664-101 CHG003								
110	Pick Kit	0.00							
Packaging	Packaging								
Packaging	**Memo**	0.00							
120	BENDING MACHINE - CROSSTUBES	0.00							
CNC Bend 2	**Memo**	0.00							
CNC Alpha 160 Bender	Bend tube as per Dwg D212-664-141 using CNC bender program 212-fw and Folio D212-664-101								

for CL 11-03-08

8/11/03/08

DP 11-2-28

Pro →

DP 11-2-28

Dart Aerospace Ltd

W/O:		WORK ORDER CHANGES					
DATE	STEP	PROCEDURE CHANGE	By	Date	Qty	Approval Chief Eng / Prod Mgr	Approval QC Inspector

Part No: D212-664-101 PAR #: _____ Fault Category: xa tubes NCR: (Yes) No DQA: [signature] Date: 11.03.15

Resolution: accepted Disposition: use as is QA: N/C Closed: [signature] Date: 11/03/15

NCR: 65982		WORK ORDER NON-CONFORMANCE (NCR)						
DATE	STEP	Description of NC Section A	Corrective Action Section B: Initial Chief Eng	Action Description Chief Eng	Sign & Date	Verification Section C	Approval Chief Eng	Approval QC Inspector
11.03.03	140	One saddle hole ovalized to Ø0.357" R.L. Pr Crack of Altatia	GP 11.03.03 QS 042	Acceptable, Still within limits of ICA.	[signature] 11-3-3	S 11/03/08	GP 11.03.03 QS1042	S 11/03/08

NOTE: Date & initial all entries

H:\fFORMS\Quality Assurance\approved QA\NCRWO RevE

Work Order ID 65982

Monday, January 31, 2011 3:51:54 PM

Item ID: D212-664-101 **Accept** **Setup Start**

Revision ID: **Stop**

Item Name: Crosstube Fwd

Start Date: 2/1/2011 **Start Qty:** 1.00 **Cust Item ID:**

Required Date: 2/18/2011 **Req'd Qty:** 1.00 **Customer:**

Reference:

Approvals: **Process Plan:** _____ **Date:** _____ **Tooling:** _____ **Date:** _____ **Run Start**

QC: _____ **Date:** _____ **SPC (Y/N):** _____ **Date:** _____ **Stop**

Sequence ID/ Work Center ID	Operation Description	Set Up/ Run Hours	Tool ID	Tool #	Plan Code	Accept Qty	Reject Qty	Reject Number	Insp. Stamp
130	QC15- Crosstube Dimensional Check	0.00							
QC	**Memo**	0.00							
Quality Control									
140	Crosstubes	0.00							
Crosstubes	**Memo**	0.00							
Crosstubes									

Sub 3/01

1-Drill pilot holes in tube as per Dwg D212-664-141 using drill Jig DT8548 & DT8549,using drill table DT8577,set-up towers in hole #7 as per QSI 10

2-Ream hole to finish size in tube as per Dwg D212-664-141using drill Jig DT8548 & DT8549.Check dimensions between holes, both sides on both cuffs, to ensure alignment with saddle holes.

3-Scribe part # and batch # using vibrating stylus as per Dwg D212-664-141

4-Deburr & Inspect for surface damage. Repair damage within limits as per Dwg D212-664-141

SAD 11-03-01

Pho Previous Page

Dart Aerospace Ltd

W/O:		WORK ORDER CHANGES					
DATE	STEP	PROCEDURE CHANGE	By	Date	Qty	Approval Chief Eng / Prod Mgr	Approval QC Inspector

Part No: _____ **PAR #:** _____ **Fault Category:** _____ **NCR:** Yes No **DQA:** _____ **Date:** _____

Resolution: _____ **Disposition:** _____ **QA: N/C Closed:** _____ **Date:** _____

NCR:		WORK ORDER NON-CONFORMANCE (NCR)						
DATE	STEP	Description of NC Section A	Corrective Action Section B			Verification Section C	Approval Chief Eng	Approval QC Inspector
			Initial Chief Eng	Action Description Chief Eng	Sign & Date			
		Found during inspection that the Small .386" hole was too Large measures Ø.400" only 1 hole affected on one cabt. R.C.						

NOTE: Date & initial all entries

H:\fFORMS\Quality Assurance\approved QA\NCRWO RevE

Work Order ID 65982

Monday, January 31, 2011 3:51:54 PM

Item ID: D212-664-101 **Accept** **Setup Start** **Stop**

Revision ID:

Item Name: Crosstube Fwd

Start Date: 2/1/2011 **Start Qty:** 1.00 **Cust Item ID:**

Required Date: 2/18/2011 **Req'd Qty:** 1.00 **Customer:**

Reference:

Approvals: **Process Plan:** _____ **Date:** _____ **Tooling:** _____ **Date:** _____ **Run Start** **Stop**

QC: _____ **Date:** _____ **SPC (Y/N):** _____ **Date:** _____

Sequence ID/ Work Center ID	Operation Description	Set Up/ Run Hours	Tool ID	Tool #	Plan Code	Accept Qty	Reject Qty	Reject Number	Insp. Stamp
150	Crosstubes Chemical Conversion	0.00				1			
HandFXtube	**Memo**	0.00							
Hand Finishing Crosstubes	Chemical Conversion Coat within 24 hours of bending and drilling		SAD 11-03-02						
160	QC5- Inspect part completeness to step on W/O	0.00				ml	11	03	03 1
QC	**Memo**	0.00							
Quality Control									
170	Outsource process - NDT per QSI038 4.1	0.00				CL	11/03/04	1	
Outsource2	**Memo**	0.00							
Outsource process - NDT	Liquid Penetrant Inspection as per QSI 038 Issue P/O: 13609 LPI as per ASTM 1417 Level 2 Attach copy of NDT results to work order								

Dart Aerospace Ltd

W/O:		WORK ORDER CHANGES					
DATE	STEP	PROCEDURE CHANGE	By	Date	Qty	Approval Chief Eng / Prod Mgr	Approval QC Inspector

Part No: _____ **PAR #:** _____ **Fault Category:** _____ **NCR:** Yes No **DQA:** _____ **Date:** _____

Resolution: _____ **Disposition:** _____ **QA: N/C Closed:** _____ **Date:** _____

NCR:		WORK ORDER NON-CONFORMANCE (NCR)						
DATE	STEP	Description of NC Section A	Corrective Action Section B			Verification Section C	Approval Chief Eng	Approval QC Inspector
			Initial Chief Eng	Action Description Chief Eng	Sign & Date			

NOTE: Date & initial all entries

H:\fFORMS\Quality Assurance\approved QA\NCRWO RevE

Work Order ID 65982

Monday, January 31, 2011 3:51:54 PM

Item ID: D212-664-101 **Accept** **Setup Start**

Revision ID: **Stop**

Item Name: Crosstube Fwd

Start Date: 2/1/2011 **Start Qty:** 1.00 **Cust Item ID:**

Required Date: 2/18/2011 **Req'd Qty:** 1.00 **Customer:**

Reference:

Approvals: **Process Plan:** _____ **Date:** _____ **Tooling:** _____ **Date:** _____ **Run Start**

QC: _____ **Date:** _____ **SPC (Y/N):** _____ **Date:** _____ **Stop**

Sequence ID/ Work Center ID	Operation Description	Set Up/ Run Hours	Tool ID	Tool #	Plan Code	Accept Qty	Reject Qty	Reject Number	Insp. Stamp
180	Receive & Inspect for Damage & Mat'l Certs	0.00							
Packaging	Packaging								
Packaging	**Memo**	0.00				1/4/3/4			
Packaging	Ensure copy of NDT results attached to work order.								
190	QC5- Inspect part completeness to step on W/O	0.00							
QC	**Memo**	0.00				11-03-04			
Quality Control	Inspect for damage & ensure results are as per Dwg D212-664-141								

Dart Aerospace Ltd

W/O:		WORK ORDER CHANGES					
DATE	STEP	PROCEDURE CHANGE	By	Date	Qty	Approval Chief Eng / Prod Mgr	Approval QC Inspector

Part No: _____ **PAR #:** _____ **Fault Category:** _____ **NCR:** Yes No **DQA:** _____ **Date:** _____

Resolution: _____ **Disposition:** _____ **QA: N/C Closed:** _____ **Date:** _____

NCR:		WORK ORDER NON-CONFORMANCE (NCR)						
DATE	STEP	Description of NC Section A	Corrective Action Section B			Verification Section C	Approval Chief Eng	Approval QC Inspector
			Initial Chief Eng	Action Description Chief Eng	Sign & Date			

NOTE: Date & initial all entries

H:\fFORMS\Quality Assurance\approved QA\NCRWO RevE

Work Order ID 65982

Monday, January 31, 2011 3:51:54 PM

Item ID: D212-664-101 **Accept** **Setup Start**

Revision ID: **Stop**

Item Name: Crosstube Fwd

Start Date: 2/1/2011 **Start Qty:** 1.00 **Cust Item ID:**

Required Date: 2/18/2011 **Req'd Qty:** 1.00 **Customer:**

Reference:

Approvals: **Process Plan:** _____ **Date:** _____ **Tooling:** _____ **Date:** _____ **Run Start**

QC: _____ **Date:** _____ **SPC (Y/N):** _____ **Date:** _____ **Stop**

Sequence ID/ Work Center ID	Operation Description	Set Up/ Run Hours	Tool ID	Tool #	Plan Code	Accept Qty	Reject Qty	Reject Number	Insp. Stamp
200 SprayPaint Spray Painting	Spray Painting per QSI005 4.2 SprayPaint	0.00							
	Memo 1-Prime inside and outside crosstube as per QSI 005 4.2 2-Paint outside crosstube with White Imron as per QSI 005 4.2 PRIME: Start Time: 9 00 Fininsh Time: 10 00 PAINT: Start Time: 2:00 Finish Time: 3:00	0.00							
						11	03	04	
210 QC Quality Control	QC14- Inspect Spray Paint	0.00							
	Memo Then,Wrap in plastic bag to protect from scratches	0.00							
						11	03	07	3

Dart Aerospace Ltd

W/O:		WORK ORDER CHANGES					
DATE	STEP	PROCEDURE CHANGE	By	Date	Qty	Approval Chief Eng / Prod Mgr	Approval QC Inspector

Part No: _____ **PAR #:** _____ **Fault Category:** _____ **NCR:** Yes No **DQA:** _____ **Date:** _____

Resolution: _____ **Disposition:** _____ **QA: N/C Closed:** _____ **Date:** _____

NCR:		WORK ORDER NON-CONFORMANCE (NCR)						
DATE	STEP	Description of NC Section A	Corrective Action Section B			Verification Section C	Approval Chief Eng	Approval QC Inspector
			Initial Chief Eng	Action Description Chief Eng	Sign & Date			

NOTE: Date & initial all entries

H:\fFORMS\Quality Assurance\approved QA\NCRWO RevE

Work Order ID 65982

Monday, January 31, 2011 3:51:54 PM

Item ID: D212-664-101 **Accept** **Setup Start** **Stop**

Revision ID:

Item Name: Crosstube Fwd

Start Date: 2/1/2011 **Start Qty:** 1.00 **Cust Item ID:**

Required Date: 2/18/2011 **Req'd Qty:** 1.00 **Customer:**

Reference:

Approvals: **Process Plan:** _____ **Date:** _____ **Tooling:** _____ **Date:** _____ **Run Start** **Stop**

QC: _____ **Date:** _____ **SPC (Y/N):** _____ **Date:** _____

Sequence ID/ Work Center ID	Operation Description	Set Up/ Run Hours	Tool ID	Tool #	Plan Code	Accept Qty	Reject Qty	Reject Number	Insp. Stamp
220	Crosstubes	0.00							
Crosstubes									
Crosstubes	**Memo**	0.00					11	03	07
	1- Lightly scuff the bonded area using a 320 grit sand paper and clean the area with 41058 wash 'n' wipe 2-Install supports with magnobond as per QSI 015 Adhere for for 12 Hrs A/R 6398 Magnobond Batch: 116227 exp: 08/2011 3- Torque bolts as per dwg — 11·03·08								
230	QC6- Inspect dimensions to drawing	0.00							
QC									
Quality Control	**Memo**	0.00							
240	Pick Kit	0.00							
Packaging									
Packaging	**Memo**	0.00							

Dart Aerospace Ltd

W/O:		WORK ORDER CHANGES					
DATE	STEP	PROCEDURE CHANGE	By	Date	Qty	Approval Chief Eng / Prod Mgr	Approval QC Inspector

Part No: _____ **PAR #:** _____ **Fault Category:** _____ **NCR:** Yes No **DQA:** _____ **Date:** _____

Resolution: _____ **Disposition:** _____ **QA: N/C Closed:** _____ **Date:** _____

NCR:		WORK ORDER NON-CONFORMANCE (NCR)						
DATE	STEP	Description of NC Section A	Corrective Action Section B			Verification Section C	Approval Chief Eng	Approval QC Inspector
			Initial Chief Eng	Action Description Chief Eng	Sign & Date			

NOTE: Date & initial all entries

H:\fFORMS\Quality Assurance\approved QA\NCRWO RevE

Work Order ID 65982

Monday, January 31, 2011 3:51:54 PM

Item ID: D212-664-101 **Accept** **Setup Start**

Revision ID: **Stop**

Item Name: Crosstube Fwd

Start Date: 2/1/2011 **Start Qty:** 1.00 **Cust Item ID:**

Required Date: 2/18/2011 **Req'd Qty:** 1.00 **Customer:**

Reference:

Approvals: **Process Plan:** _____ **Date:** _____ **Tooling:** _____ **Date:** _____ **Run Start**

QC: _____ **Date:** _____ **SPC (Y/N):** _____ **Date:** _____ **Stop**

Sequence ID/ Work Center ID	Operation Description	Set Up/ Run Hours	Tool ID	Tool #	Plan Code	Accept Qty	Reject Qty	Reject Number	Insp. Stamp
250	QC4- 100% Inspect kits for completeness	0.00							
QC									
Quality Control	**Memo**	0.00							
260		0.00							
Packaging	Packaging								
Packaging	**Memo**	0.00							
	Identify and pack for shipping as per PPP D212-664-101								
270	QC21- Final Inspection - Work Order Release	0.00							
QC									
Quality Control	**Memo**	0.00							

Dart Aerospace Ltd

W/O:		WORK ORDER CHANGES					
DATE	STEP	PROCEDURE CHANGE	By	Date	Qty	Approval Chief Eng / Prod Mgr	Approval QC Inspector

Part No: _____ **PAR #:** _____ **Fault Category:** _____ **NCR:** Yes No **DQA:** _____ **Date:** _____

Resolution: _____ **Disposition:** _____ **QA: N/C Closed:** _____ **Date:** _____

NCR:		WORK ORDER NON-CONFORMANCE (NCR)						
DATE	STEP	Description of NC Section A	Corrective Action Section B			Verification Section C	Approval Chief Eng	Approval QC Inspector
			Initial Chief Eng	Action Description Chief Eng	Sign & Date			

NOTE: Date & initial all entries

H:\fFORMS\Quality Assurance\approved QA\NCRWO RevE

Picklist Print

Monday, January 31, 2011 3:52:01 PM

Work Order ID: 65982

Parent Item: D212-664-101

Parent Item Name: Crosstube Fwd

Start Date: 2/1/2011 **Required Date:** 2/18/2011

Start Qty: 1.00 **Required Qty:** 1.00

Comments: IPP Rev:E□04.02.16□Reformat□KJ/DS
IPP Rev:F 06-03-29 Remove Coments on Pick List JLM
IPP Rev:G 07-04-30 As per Rev C JLM

Component Item ID/ Item Name	Replacement Item ID	Mfg/ Purch	Bin Item	Primary Location	Last Location	Route Seq ID	Unit of Measure	Qty on Hand	Qty per Kit	Total Qty	Qty Issued	Date Issued	Status
D212-664-101TRN		Manufactured	No			110	Each	3.0000	1	1			
Crosstube Turning Detail													

Location		Loc Qty	Loc Code
FG046		2	
	64373	1	
	64374	1	
LG		1	
	63696	1	

11-2-28

Component Item ID/ Item Name	Replacement Item ID	Mfg/ Purch	Bin Item	Primary Location	Last Location	Route Seq ID	Unit of Measure	Qty on Hand	Qty per Kit	Total Qty	Qty Issued	Date Issued	Status
D3595-063-450		Manufactured	No			230	Each	49.3390	4	4.210526			
RUBBER CUSHION													

11·03·07

Location		Loc Qty	Loc Code
LG		24.33897368	
	53775	5.97897368	
	58161	3.56	
	59580	0.12	
	61465	4.68	
	63960	10	
ST415		25	
	64171	24	
	64300	1	

BT# 65656

Dart Aerospace Ltd

W/O:		WORK ORDER CHANGES					
DATE	STEP	PROCEDURE CHANGE	By	Date	Qty	Approval Chief Eng / Prod Mgr	Approval QC Inspector

Part No: _____ **PAR #:** _____ **Fault Category:** _____ **NCR:** Yes No **DQA:** _____ **Date:** _____

Resolution: _____ **Disposition:** _____ **QA: N/C Closed:** _____ **Date:** _____

NCR:		WORK ORDER NON-CONFORMANCE (NCR)						
DATE	STEP	Description of NC Section A	Corrective Action Section B			Verification Section C	Approval Chief Eng	Approval QC Inspector
			Initial Chief Eng	Action Description Chief Eng	Sign & Date			

NOTE: Date & initial all entries

Picklist Print

Monday, January 31, 2011 3:52:01 PM

Work Order ID: 65982

Parent Item: D212-664-101

Parent Item Name: Crosstube Fwd

Start Date: 2/1/2011 **Required Date:** 2/18/2011

Start Qty: 1.00 **Required Qty:** 1.00

MS21920-25 Clamp(per MIL-DTL-8783C)	Purchased	No	220	Each	115.0000	4	4	11-03-07

Location	Loc Qty	Loc Code
LG	91	
113281	0	
114759	5	
114901	3	
115278	1	
115849	32	
116264	50	
ST451	24	
113281	5	
113282	18	
113744	1	

D2893-1 2.75 Support	Manufactured	No	220	Each	19.0000	2	2	11-03-07

Location	Loc Qty	Loc Code
LG	19	
63367	19	

8 D3428-1 Placard	Manufactured	No	240	Each	11.0000	1	1	

Location	Loc Qty	Loc Code
ST056	11	
63978	11	63970

Dart Aerospace Ltd

W/O:		WORK ORDER CHANGES					
DATE	STEP	PROCEDURE CHANGE	By	Date	Qty	Approval Chief Eng / Prod Mgr	Approval QC Inspector

Part No: _____ **PAR #:** _____ **Fault Category:** _____ **NCR:** Yes No **DQA:** _____ **Date:** _____

Resolution: _____ **Disposition:** _____ **QA: N/C Closed:** _____ **Date:** _____

NCR:		WORK ORDER NON-CONFORMANCE (NCR)						
DATE	STEP	Description of NC Section A	Corrective Action Section B			Verification Section C	Approval Chief Eng	Approval QC Inspector
			Initial Chief Eng	Action Description Chief Eng	Sign & Date			

NOTE: Date & initial all entries

H:\fFORMS\Quality Assurance\approved QA\NCRWO RevE

Picklist Print

Monday, January 31, 2011 3:52:01 PM

Work Order ID: 65982

Parent Item: D212-664-101

Parent Item Name: Crosstube Fwd

Start Date: 2/1/2011 **Required Date:** 2/18/2011

Start Qty: 1.00 **Required Qty:** 1.00

AN6-35A BOLT	Purchased	No		240	Each	90.0000	4	4	

Location	Loc Qty	Loc Code
ST343	90	
115742	40	115742
116528	50	

AN6-36A Bolt	Purchased	No		240	Each	68.0000	4	4	

Location	Loc Qty	Loc Code
ST343	68	
115698	30	
115835	18	
116400	20	116400

MS21042L6 Nut	Purchased	No		240	Each	294.0000	6	6	

Location	Loc Qty	Loc Code
ST300	294	
111578	4	
114495	1	
115300	39	
116102	50	116102
116373	100	
116548	100	

AN960JD616 Washer	NAS1149D0663J	Purchased	No	240	Each	0.0000	18	18	M11 5696 14x 01/31/11 M11 5996 4x

Dart Aerospace Ltd

W/O:		WORK ORDER CHANGES					
DATE	STEP	PROCEDURE CHANGE	By	Date	Qty	Approval Chief Eng / Prod Mgr	Approval QC Inspector

Part No: _____ **PAR #:** _____ **Fault Category:** _____ **NCR:** Yes No **DQA:** _____ **Date:** _____

Resolution: _____ **Disposition:** _____ **QA: N/C Closed:** _____ **Date:** _____

NCR:		WORK ORDER NON-CONFORMANCE (NCR)						
DATE	STEP	Description of NC Section A	Corrective Action Section B			Verification Section C	Approval Chief Eng	Approval QC Inspector
			Initial Chief Eng	Action Description Chief Eng	Sign & Date			

NOTE: Date & initial all entries

H:\fFORMS\Quality Assurance\approved QA\NCRWO RevE

DART AEROSPACE LTD	Work Order:	115982
Description: Crosstube High Fwd (205/212/412)	**Part Number:**	**D212-664-101**
Inspection Dwg: D212-664-141 **Rev:** D		**Page 1 of 1**

Required Dimension	Min	Max
Height	26.79	27.05
1/2 Span	53.59	53.85
Angle	49	52
Total Span	107.18	107.7

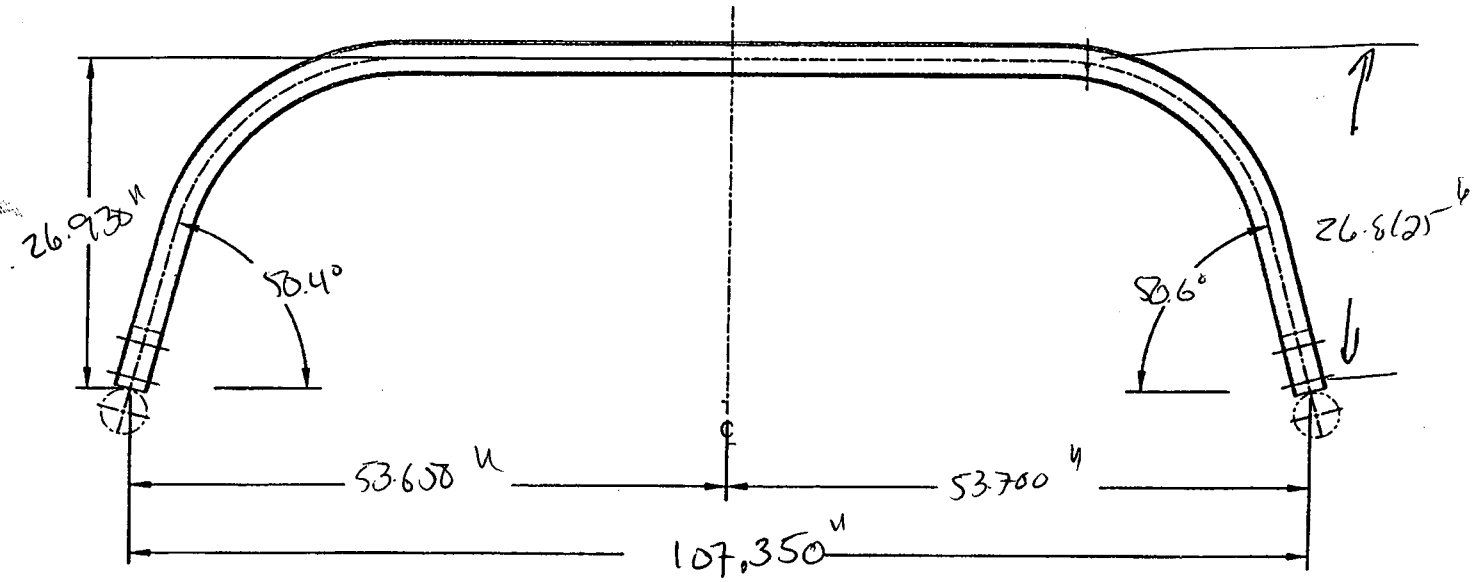

Comments

QC15 Inspection	
Date	11/03/01

Rev	Date	Change	Revised by	Approved
A	07.02.06	New Issue	KJ/JM	
B	07.05.31	Dimensions updated per Dwg Rev C	KJ/JM	
C	10.04.01	Dwg Rev updated	KJ	

Dart Aerospace Ltd

W/O:		WORK ORDER CHANGES					
DATE	STEP	PROCEDURE CHANGE	By	Date	Qty	Approval Chief Eng / Prod Mgr	Approval QC Inspector

Part No: _____ **PAR #:** _____ **Fault Category:** _____ **NCR:** Yes No **DQA:** _____ **Date:** _____

Resolution: _____ **Disposition:** _____ **QA: N/C Closed:** _____ **Date:** _____

NCR:		WORK ORDER NON-CONFORMANCE (NCR)						
DATE	STEP	Description of NC Section A	Corrective Action Section B			Verification Section C	Approval Chief Eng	Approval QC Inspector
			Initial Chief Eng	Action Description Chief Eng	Sign & Date			

NOTE: Date & initial all entries

H:\fFORMS\Quality Assurance\approved QA\NCRWO RevE

D

Item	Qty -141	Qty -141B	Part Number	Description
1	X		D212-664-141	CROSSTUBE ASSEMBLY (205/212/412 HIGH FWD)
2		X	D212-664-141B	CROSSTUBE ASSEMBLY (214 HIGH FWD)
3	1	1	D6005-128	CROSSTUBE
4	2	2	D2893-1	SUPPORT
5	4	4	D3595-063-450	RUBBER CUSHION
6	4	4	MS21920-25	CLAMP (OR MS21920-26)
7	A/R	A/R	MAGNOBOND 6398	ROCKWELL SPECIFICATION RBO-120-023 ADHESIVE (TEXTRON/BELL SPEC. 299-947-100, TYPE II, CLASS 2 ADHESIVE)

GENERAL NOTES:

1) MATERIAL: MANUFACTURED FROM D6005-128
   FINISHED LENGTH = 126.514±0.020
2) FINISH: CHEMICAL CONVERSION COAT PER DART QSI 005 4.1
   PRIME INSIDE AND OUTSIDE PER DART QSI 005 4.2
   PAINT OUTSIDE PER DART QSI 005 4.2
3) TOLERANCES ARE PER DART QSI 018 UNLESS OTHERWISE NOTED
4) UNITS: INCHES UNLESS OTHERWISE NOTED.
5) BREAK SHARP EDGES: 0.005 TO 0.010 MAX.
6) IDENTIFICATION: SCRIBE DART PART NUMBER "D212-664-XXX" AND BATCH NUMBER ON INSIDE OF CUFF USING VIBRATING STYLUS
7) WEIGHT: D212-664-141 = 33.6 lbs (PER IIN-D212-664)
   D212-664-141B = 33.6 lbs (PER IIN-D212-664)
8) PART IS SYMMETRIC ABOUT CENTERLINE.
9) RUN CUTTER OFF PART. BLEND OUT EDGE LONGITUDINALY, TRANSITION SHOULD BE SMOOTH.
10) BEND PROGRESSIVELY WITH A MINIMUM OF 3 PASSES. MAXIMUM TUBE FLATTENING DUE TO BENDING IS 6% BASED ON O.D.
11) LIQUID PENETRANT INSPECT OUTSIDE SURFACE OF CROSSTUBE PER QSI 038.
12) INSTALL D2893-1 SUPPORT USING 0.03" TO 0.06" THICK LAYER OF MAGNOBOND 6398 TO THE SURFACE OF D2893-1 THAT WILL BE IN CONTACT WITH THE CROSSTUBE PER QSI 015. LET CURE FOR 12 HOURS AFTER INSTALLATION AND PRIOR TO PACKAGING.
13) INSTALL MS21920-25 CLAMPS (OR -26) WITH D3595-063-450 RUBBER CUSHIONS TO SECURE THE D2893-1 SUPPORT ON TOP SIDE OF THE CROSSTUBE. ENSURE CLAMPS ARE OPPOSITE OF CROSSTUBE SUPPORT.
14) EXTREME CARE MUST BE TAKEN TO PROTECT THE OUTSIDE SURFACE OF THE TUBE. THE OUTSIDE SURFACE MUST BE SMOOTH AND FREE FROM SURFACE DEFECTS SUCH AS SCRATCHES, NICKS, OR DENTS. DEFECTS UP TO 0.005" MAY BE BLENDED OUT LONGITUDINALLY. CIRCUMFERENTIAL GRIND MARKS ARE UNACCEPTABLE.
15) TORQUE CLAMPS 80 TO 100 IN-LB. ENSURE AT LEAST 1.5 THREADS SHOWING IN SAFETY AND THAT NUT HAS NOT BOTTOMED-OUT AFTER TORQUING.

UNCONTROLLED COPY
SUBJECT TO AMENDMENT
WITHOUT NOTICE
WORK ORDER
NO. 65982
PS11-02-1

RELEASED
2009-10-29

REV.	DESCRIPTION	BY	DATE
D	REFORMAT/REVISE GENERAL NOTES/PART LIST; REORGANIZED VIEWS AND REFORMATTED DRAWING TO CURRENT STANDARDS; ADD -141B (ZN B4-2, D4-2); REMOVED REF & ADD TOLERANCES (ZN B4-3, C6-3, C8-3 & B6-3); RELOCATED FLAG #6 PER PAR 08-046 (ZN A5-3); MOVED TURNING DETAIL & UPDATED TOLERANCE TO SHEET 4	RF	09.09.30
C	REMOVE -851 ABRASION STRIP; ADD MAGNOBOND 6398. CUSHION, REVERSE CLAMPS	PH	07.03.08
B	ADD HOLES FOR COMPATABILITY WITH BHT/AA SKIDTUBES	PH	05.02.04
A	NEW ISSUE	PH	00.12.12

DESIGN	PH	DART AEROSPACE LTD HAWKESBURY, ONTARIO, CANADA
DRAWN	RF	
CHECKED		DRAWING NO. REV. D
MFG. APPR.		D212-664-141 SHEET 1 OF 4
APPROVED		TITLE SCALE
DE APPR.		XTUBE ASS'Y (205/212/412 HI FWD) NTS
DATE	09.09.30	

COPYRIGHT © 2000 BY DART AEROSPACE LTD
THIS DOCUMENT IS PRIVATE AND CONFIDENTIAL AND IS SUPPLIED ON THE EXPRESS CONDITION THAT IT IS NOT TO BE USED FOR ANY PURPOSE OR COPIED OR COMMUNICATED TO ANY OTHER PERSON WITHOUT WRITTEN PERMISSION FROM DART AEROSPACE LTD.

Dart Aerospace Ltd

W/O:		WORK ORDER CHANGES					
DATE	STEP	PROCEDURE CHANGE	By	Date	Qty	Approval Chief Eng / Prod Mgr	Approval QC Inspector

Part No: _____ **PAR #:** _____ **Fault Category:** _____ **NCR:** Yes No **DQA:** _____ **Date:** _____

Resolution: _____ **Disposition:** _____ **QA: N/C Closed:** _____ **Date:** _____

NCR:		WORK ORDER NON-CONFORMANCE (NCR)						
DATE	STEP	Description of NC Section A	Corrective Action Section B			Verification Section C	Approval Chief Eng	Approval QC Inspector
			Initial Chief Eng	Action Description Chief Eng	Sign & Date			

NOTE: Date & initial all entries

H:\fFORMS\Quality Assurance\approved QA\NCRWO RevE

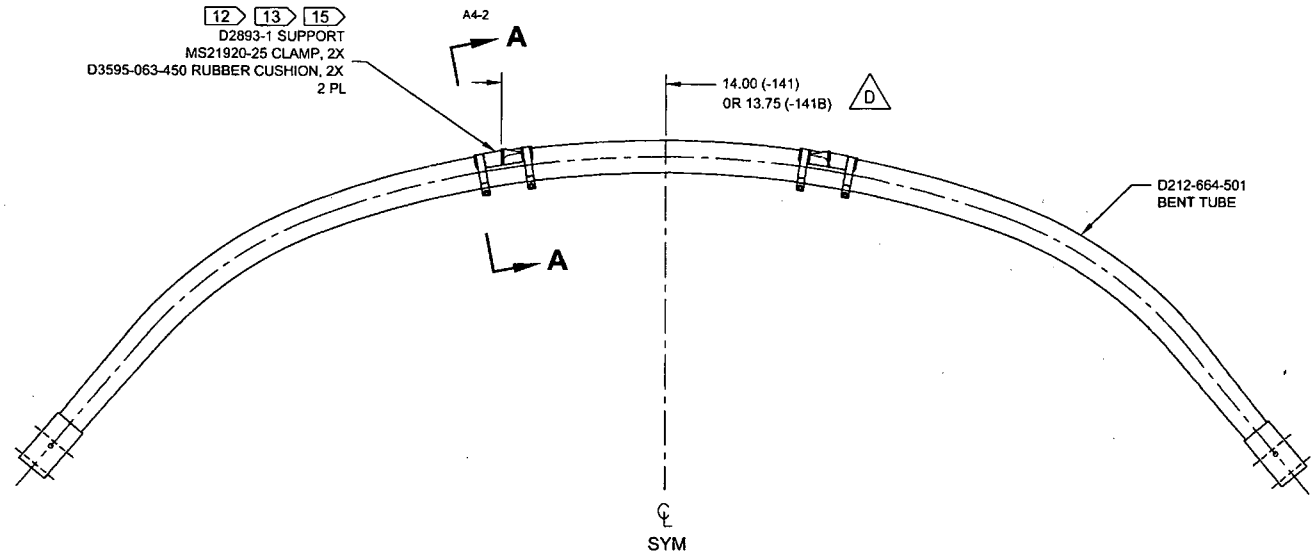

D212-664-141/-141B
ASSEMBLY DETAIL D

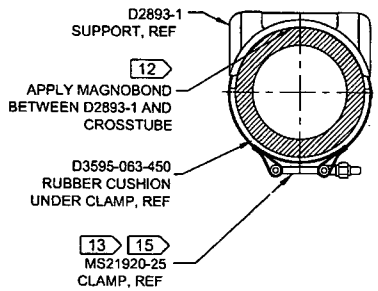

SECTION A-A D5-2
SCALE 4X

w/o 65982

RELEASED
2009 -10- 29

DESIGN	PH	**DART AEROSPACE LTD** HAWKESBURY, ONTARIO, CANADA	
DRAWN	RF		
CHECKED		DRAWING NO.	REV. D
MFG. APPR.		D212-664-141	SHEET 2 OF 4
APPROVED		TITLE	SCALE
DE APPR.		XTUBE ASS'Y (205/212/412 HI FWD)	NTS
DATE	09.09.30		

COPYRIGHT © 2000 BY DART AEROSPACE LTD
THIS DOCUMENT IS PRIVATE AND CONFIDENTIAL AND IS SUPPLIED ON THE EXPRESS CONDITION THAT IT IS NOT TO BE USED FOR ANY PURPOSE OR COPIED OR COMMUNICATED TO ANY OTHER PERSON WITHOUT WRITTEN PERMISSION FROM DART AEROSPACE LTD.

Dart Aerospace Ltd

W/O:		WORK ORDER CHANGES					
DATE	STEP	PROCEDURE CHANGE	By	Date	Qty	Approval Chief Eng / Prod Mgr	Approval QC Inspector

Part No: _____ **PAR #:** _____ **Fault Category:** _____ **NCR:** Yes No **DQA:** _____ **Date:** _____

Resolution: _____ **Disposition:** _____ **QA: N/C Closed:** _____ **Date:** _____

NCR:		WORK ORDER NON-CONFORMANCE (NCR)						
DATE	STEP	Description of NC Section A	Corrective Action Section B			Verification Section C	Approval Chief Eng	Approval QC Inspector
			Initial Chief Eng	Action Description Chief Eng	Sign & Date			

NOTE: Date & initial all entries

H:\fFORMS\Quality Assurance\approved QA\NCRWO RevE

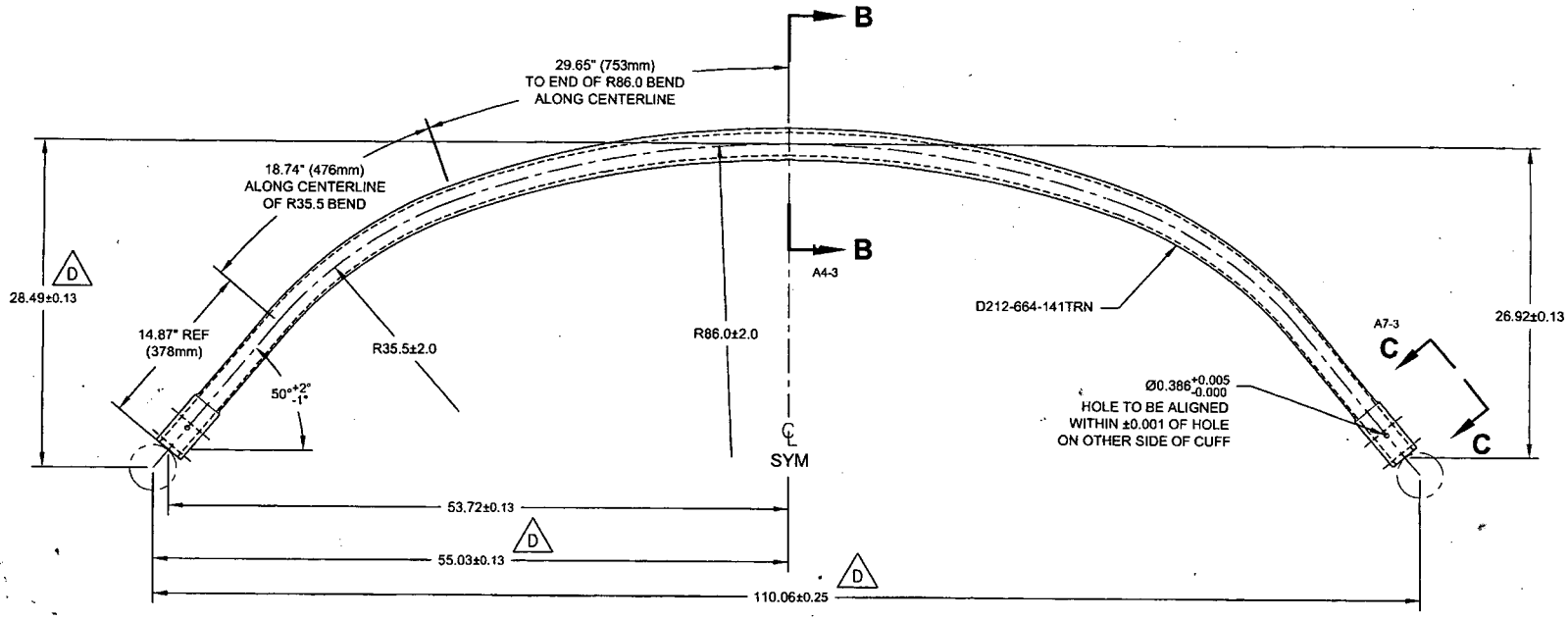

D212-664-501
BENDING AND DRILLING DETAIL 10 D

w/o 65952

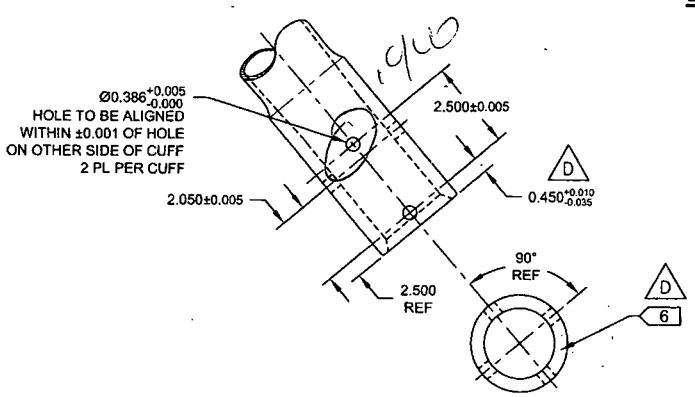

VIEW C-C: CUFF DETAIL C2-3
SCALE 3X

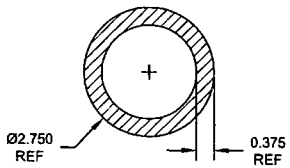

SECTION B-B C4-3
SCALE 4X

RELEASED
2009 -10- 29

DESIGN		**DART AEROSPACE LTD** HAWKESBURY, ONTARIO, CANADA
DRAWN	RF	
CHECKED		DRAWING NO. D212-664-141 — REV. D — SHEET 3 OF 4
MFG. APPR.		
APPROVED		TITLE: XTUBE ASS'Y (205/212/412 HI FWD) — SCALE: NTS
DE APPR.		
DATE	09.09.30	

COPYRIGHT © 2000 BY DART AEROSPACE LTD
THIS DOCUMENT IS PRIVATE AND CONFIDENTIAL AND IS SUPPLIED ON THE EXPRESS CONDITION THAT IT IS NOT TO BE USED FOR ANY PURPOSE OR COPIED OR COMMUNICATED TO ANY OTHER PERSON WITHOUT WRITTEN PERMISSION FROM DART AEROSPACE LTD

Dart Aerospace Ltd

W/O:		WORK ORDER CHANGES					
DATE	STEP	PROCEDURE CHANGE	By	Date	Qty	Approval Chief Eng / Prod Mgr	Approval QC Inspector

Part No: _____ **PAR #:** _____ **Fault Category:** _____ **NCR:** Yes No **DQA:** _____ **Date:** _____

Resolution: _____ **Disposition:** _____ **QA: N/C Closed:** _____ **Date:** _____

NCR:		WORK ORDER NON-CONFORMANCE (NCR)						
DATE	STEP	Description of NC Section A	Corrective Action Section B			Verification Section C	Approval Chief Eng	Approval QC Inspector
			Initial Chief Eng	Action Description Chief Eng	Sign & Date			

NOTE: Date & initial all entries

H:\fFORMS\Quality Assurance\approved QA\NCRWO RevE

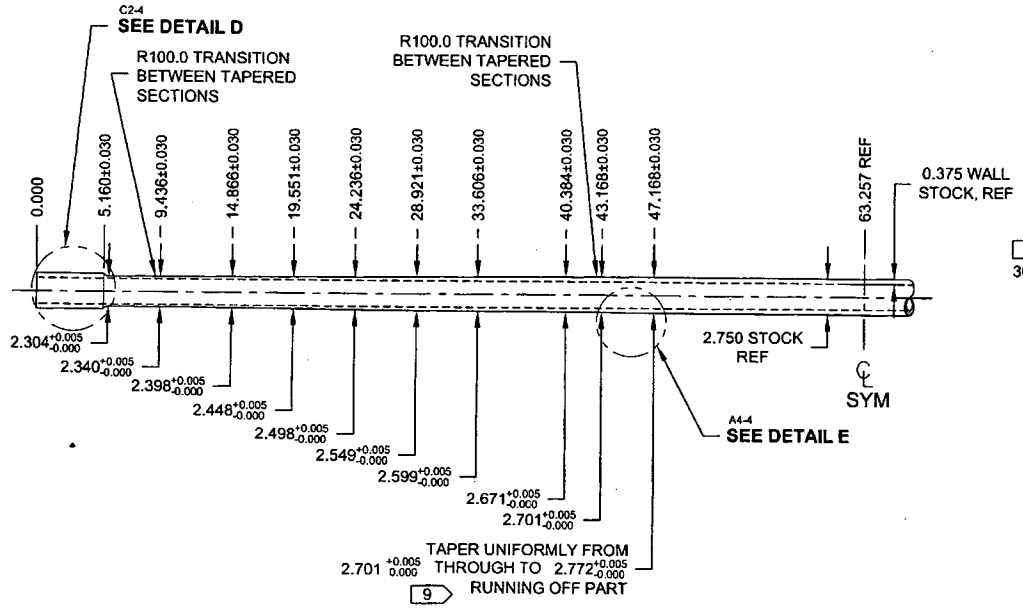

D212-664-141TRN
TURNING DETAIL

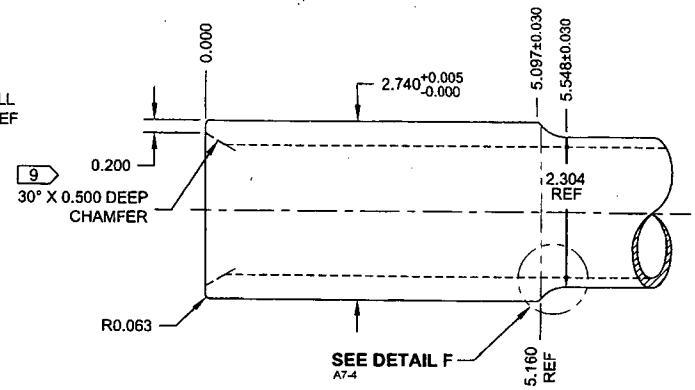

DETAIL D:
CROSSTUBE CUFF D8-4
SCALE 5X

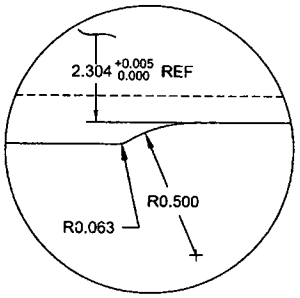

DETAIL F:
CUFF TRANSITION C2-4
SCALE 10X

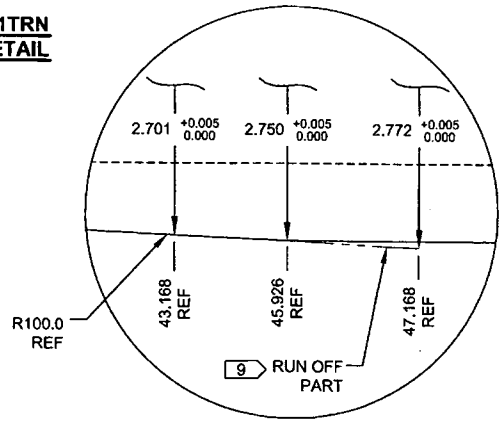

DETAIL E:
TAPER RUN-OFF C5-4
NOT TO SCALE

w/o 65982

RELEASED
2009 -10- 29

DESIGN	PH	DART AEROSPACE LTD HAWKESBURY, ONTARIO, CANADA
DRAWN	RF	
CHECKED		DRAWING NO. D212-664-141 — REV. D — SHEET 4 OF 4
MFG. APPR.		
APPROVED		TITLE: XTUBE ASS'Y (205/212/412 HI FWD) — SCALE: NTS
DE APPR.		
DATE	09.09.30	

COPYRIGHT © 2009 BY DART AEROSPACE LTD
THIS DOCUMENT IS PRIVATE AND CONFIDENTIAL AND IS SUPPLIED ON THE EXPRESS CONDITION THAT IT IS NOT TO BE USED FOR ANY PURPOSE OR COPIED OR COMMUNICATED TO ANY OTHER PERSON WITHOUT WRITTEN PERMISSION FROM DART AEROSPACE LTD.

Dart Aerospace Ltd

W/O:		WORK ORDER CHANGES					
DATE	STEP	PROCEDURE CHANGE	By	Date	Qty	Approval Chief Eng / Prod Mgr	Approval QC Inspector

Part No: _____ **PAR #:** _____ **Fault Category:** _____ **NCR:** Yes No **DQA:** _____ **Date:** _____

Resolution: _____ **Disposition:** _____ **QA: N/C Closed:** _____ **Date:** _____

NCR:		WORK ORDER NON-CONFORMANCE (NCR)						
DATE	STEP	Description of NC Section A	Corrective Action Section B			Verification Section C	Approval Chief Eng	Approval QC Inspector
			Initial Chief Eng	Action Description Chief Eng	Sign & Date			

NOTE: Date & initial all entries

H:\fFORMS\Quality Assurance\approved QA\NCRWO RevE

ACUREN

LIQUID PENETRANT TEST REPORT

P- 05497

PAGE 1 OF 1

CLIENT: DART AEROSPACE
ATTENTION: LINDA LAPELLE / CHANTALE / IAN
ADDRESS: ABERDEEN ST., HAWKESBURY, ON
PROJECT: WET - FLUORESCENT LIQUID PENETRANT INSPECTION ON S "CROSSTUBE"
ITEM(S) EXAMINED: SEE BELOW

DATE: MAR/04/2011
TIME: AM ☑ PM ☐
ACUREN JOB NO.: 188-11-02107
PO/WO NO.:
WORK LOCATION: AS ADDRESS
ACCEPTANCE STD.: ASTM1417/CST-038 REV./DATE: 2005

JOB DESCRIPTION | PROCEDURE NO. LT-002 REV./DATE 2008 | TECHNIQUE NO. LT-002 REV./DATE 2008

PART NO.: MATERIAL: ALODINE ALUMINUM THICKNESS: N/A

SCOPE: PERFORMED A WET FLUORESCENT LIQUID PENETRANT INSPECTION ON 100% OF THE EXTERNAL SURFACE

TEST DETAILS

METHOD: ☑ FLUORESCENT ☐ VISIBLE
FAMILY BRAND: MAGNAFLUX
PENETRANT: ZL-67 — MINIMUM DWELL TIME 10 MIN.
PENETRANT REMOVER: H2O — MINIMUM DRY TIME >10 MIN.
DEVELOPER: SKD-S2 — MINIMUM DWELL TIME 10 MIN.
DEVELOPER TYPE: ☑ NON AQUEOUS ☐ AQUEOUS ☐ DRY

☑ WATER WASH ☐ SOLVENT REMOVABLE ☐ POST EMULSIFIED
BLACK LIGHT S/N 13798 ☑ OUTPUT > 1000 μ W/CM² ☑ AMBIENT < 2 fc
LIGHTING EQUIP. ☐ FLASHLIGHT ☐ TROUBLELIGHT ☐ OUTPUT>100 fc @ SURFACE
OTHER
LIGHT METER S/N: CAL DUE DATE: AUG/05/2011

TEST SURFACE

SURFACE CONDITION: ☐ AS GROUND ☐ AS WELDED ☐ MACHINED ☐ SHOT BLASTED ☑ CLEAN BARE METAL
SURFACE TEMPERATURE: ☐ < - 4°C/ 20°F ☐ - 4°C/ 20°F TO 10°C/50°F ☑ 10°C/50°F TO 52°C/125°F ☐ > 52°C/125°F

RESULTS- (☐ METRIC ☑ IMPERIAL)

			ITEM #
1	CROSSTUBE W.O. ID 66519	✓	ITEM ID: D212-664-101 (FWD) -1
2	CROSSTUBE W.O. ID 66520	✓	ITEM ID: D212-664-101 (FWD) -2
3	CROSSTUBE W.O. ID 66481	✓	ITEM ID: D212-664-107 (LOW STD FWD) -3
4	CROSSTUBE W.O. ID 65981	✓	ITEM ID: D212-664-101 (FWD) -4
5	CROSSTUBE W.O. ID 65982	✓	ITEM ID: D212-664-101 (FWD) -5

11-03-04

NO UNACCEPTABLE INDICATION WAS DETECTED AS PER APPLICABLE STANDARD

Scope of Services
The agreement of Acuren Group Inc. to perform services extends only to those services provided for in writing. Under no circumstances shall such services extend beyond the performance of the requested services. It is expressly understood that all descriptions, comments and expressions of opinion reflect the opinions or observations of Acuren Group Inc. based on information and assumptions supplied by the owner/operator and are not intended nor can they be construed as representations or warranties. Acuren Group Inc. is not assuming any responsibilities of the owner/operator and the owner/operator retains complete responsibility for the engineering, manufacture, repair and use decisions as a result of the data or other information provided by Acuren Group Inc. In no event shall Acuren Group Inc.'s liability in respect of the services referred to herein exceed the amount paid for such services.

Standard of Care
In performing the services provided, Acuren Group Inc. uses the degree, care and skill ordinarily exercised under similar circumstances by others performing such services in the same or similar locality. No other warranty, expressed or implied, is made or intended by Acuren Group Inc.

SIGNATURES

CLIENT REPRESENTATIVE: Ian Tilley (PRINT) — (SIGNATURE)
TECHNICIAN (SIGNATURE):
NAME (PRINT):
1ST TECHNICIAN — 2ND TECHNICIAN
CGSB LEVEL ____ SNT LEVEL ____ CGSB LEVEL ____ SNT LEVEL ____
CGSB REG. NO ____ CGSB REG. NO ____

DTR # 644631

REPORT REVIEWED BY:
NAME INITIALS

WHITE – CLIENT COPY CANARY – OFFICE COPY PINK – TECHNICIAN COPY GOLD – OFFICE COPY